Connect Tech Inc.

Embedded Computing Experts

www.connecttech.com

USERS GUIDE

Xtreme/GPU

Users Guide

Connect Tech Inc.
42 Arrow Road
Guelph, Ontario
N1K 1S6
www.connecttech.com

Tel: **519-836-1291**
Toll: **800-426-8979** *(North America only)*
Fax: 519-836-4878
Email: sales@connecttech.com
support@connecttech.com

CTIM-00490 Revision 0.00 2019/01/24

Table of Contents

Preface

Disclaimer

The information contained within this user's guide, including but not limited to any product specification, is subject to change without notice.

Connect Tech assumes no liability for any damages incurred directly or indirectly from any technical or typographical errors or omissions contained herein or for discrepancies between the product and the user's guide.

Customer Support Overview

If you experience difficulties after reading the manual and/or using the product, contact the Connect Tech reseller from which you purchased the product. In most cases the reseller can help you with product installation and difficulties.

In the event that the reseller is unable to resolve your problem, our highly qualified support staff can assist you. Our support section is available 24 hours a day, 7 days a week on our website at: http://connecttech.com/support/resource-center/. See the contact information section below for more information on how to contact us directly. Our technical support is always free.

Contact Information

Mail/Courier
Connect Tech Inc.
Technical Support
42 Arrow Road
Guelph, Ontario
Canada N1K 1S6

Email/Internet

sales@connecttech.com
support@connecttech.com
www.connecttech.com

Note:
Please go to the **Connect Tech Resource Center** for product manuals, installation guides, device drivers, BSPs and technical tips. Submit your **technical support** questions to our support engineers.

Telephone/Facsimile
Technical Support representatives are ready to answer your call Monday through Friday, from 8:30 a.m. to 5:00 p.m. Eastern Standard Time. Our numbers for calls are:

Toll Free: 800-426-8979 (North America only)
Telephone: 519-836-1291 (Live assistance available 8:30 a.m. to 5:00 p.m. EST, Monday to Friday)
Facsimile: 519-836-4878 (on-line 24 hours)

Limited Product Warranty

Connect Tech Inc. provides a one-year Warranty for the Xtreme/GPU. Should this product, in Connect Tech Inc.'s opinion, fail to be in good working order during the warranty period, Connect Tech Inc. will, at its option, repair or replace this product at no charge, provided that the product has not been subjected to abuse, misuse, accident, disaster or non-Connect Tech Inc. authorized modification or repair.

You may obtain warranty service by delivering this product to an authorized Connect Tech Inc. business partner or to Connect Tech Inc. along with proof of purchase. Product returned to Connect Tech Inc. must be pre-authorized by Connect Tech Inc. with an RMA (Return Material Authorization) number marked on the outside of the package and sent prepaid, insured and packaged for safe shipment. Connect Tech Inc. will return this product by prepaid ground shipment service.

The Connect Tech Inc. Limited Warranty is only valid over the serviceable life of the product. This is defined as the period during which all components are available. Should the product prove to be irreparable, Connect Tech Inc. reserves the right to substitute an equivalent product if available or to retract the Warranty if no replacement is available.

The above warranty is the only warranty authorized by Connect Tech Inc. Under no circumstances will Connect Tech Inc. be liable in any way for any damages, including any lost profits, lost savings or other incidental or consequential damages arising out of the use of, or inability to use, such product.

Copyright Notice

Trademark Acknowledgment

ESD Warning

Electronic components and circuits are sensitive to ElectroStatic Discharge (ESD). When handling any circuit board assemblies including Connect Tech carrier assemblies, it is recommended that ESD safety precautions be observed. ESD safe best practices include, but are not limited to:

- Leaving circuit boards in their antistatic packaging until they are ready to be installed.
- Using a grounded wrist strap when handling circuit boards, at a minimum you should touch a grounded metal object to dissipate any static charge that may be present on you.
- Only handling circuit boards in ESD safe areas, which may include ESD floor and table mats, wrist strap stations and ESD safe lab coats.
- Avoiding handling circuit boards in carpeted areas.
- Try to handle the board by the edges, avoiding contact with components.

Revision History

Revision	Date	Changes
0.00	2019/01/24	Initial Version

Introduction

Connect Tech's Xtreme/GPU brings exceptional desktop-level graphics, outstanding multimedia features, and GPU processing power to the PCIe/104 form factor; with the ability to attach a NVIDIA® graphical solutions for unequal performance.

With Connect Tech's NVIDIA® solution, the Xtreme/GPU transforms into a processing powerhouse. With access to the NVIDIA® CUDA™ Cores, the GPU can become a parallel computational CPU for non-graphical applications.

Product Features and Specifications

Feature	Xtreme/GPU
PCB Size / Overall Size	Top Stacking (XGGBASE-01) 95.89mm x 101.6mm (3.775” x 4.000”) – PCIe/104 Compliant Maximum Top Side Assembly Height (Attached Thermal Plate): 11.75mm Maximum Top Side Assembly Height (Active Heat Sink): 21.75mm [4] Maximum Top Side Assembly Height (Passive Heat Pipe): 20.75mm [4] 3D STEP Model: **download here**
	Bottom Stacking (XGGBASE-02) 95.89mm x 101.6mm (3.775” x 4.250”) – PCIe/104 Compliant Maximum Bottom Side Assembly Height (Attached Thermal Plate): 11.75mm Maximum Bottom Side Assembly Height (Active Heat Sink): 21.75mm [4] Maximum Bottom Side Assembly Height (Passive Heat Pipe): 20.75mm [4] 3D STEP Model: **download here**
Display	4x DisplayPort/HDMI/DVI [1] (Output Selected by Attached Cable)
GPU Compatibility	MXM 3.1
PCIe/104	Top Stacking (XGGBASE-01) PCIe/104 Top Stacking Only (No Top PCIe/104 Connector Present)
	Bottom Stacking (XGGBASE-02) PCIe/104 Bottom Stacking Only (No Bottom PCIe/104 Connector Present)
PCI Express	Default Linking at x16 PCIe Gen 3.0 Link Optional Ordering Variant for Linking at x1 PCIe Gen 3.0 Link
Power Requirements	+12V ± 5% +5V ± 5% (Sourced from PCIe/104 Bus) Power Consumption is GPU Dependent (Please Contact to Sales for Additional Information)
Embedded Power	+3.3V @ 6A [2]
Operating Temperature	GPU Dependent (Please Contact to Sales for Additional Information)
Accessories	Cable Kit Active Heat Sink (XHG001) [3] Active Heat Sink (XHG009) Passive Heat Pipe (XHG002)
Warranty and Support	Limited Warranty and Support Dependent Upon Selected GPU

Note [1]: The number of simultaneous display outputs and the video format per port may be limited by the GPU. Please confirm with Sales what your selected GPU capabilities are.

Note [2]: Provided from On-Board Power Supply. Sourced from +5V Rail.

Note [3]: Not intended for use with Xtreme/GPU boards that included the NVIDIA GTX1050/1050Ti

Note [4]: Excluding 1050/1050Ti Xtreme/GPU

Product Overview

Block Diagram

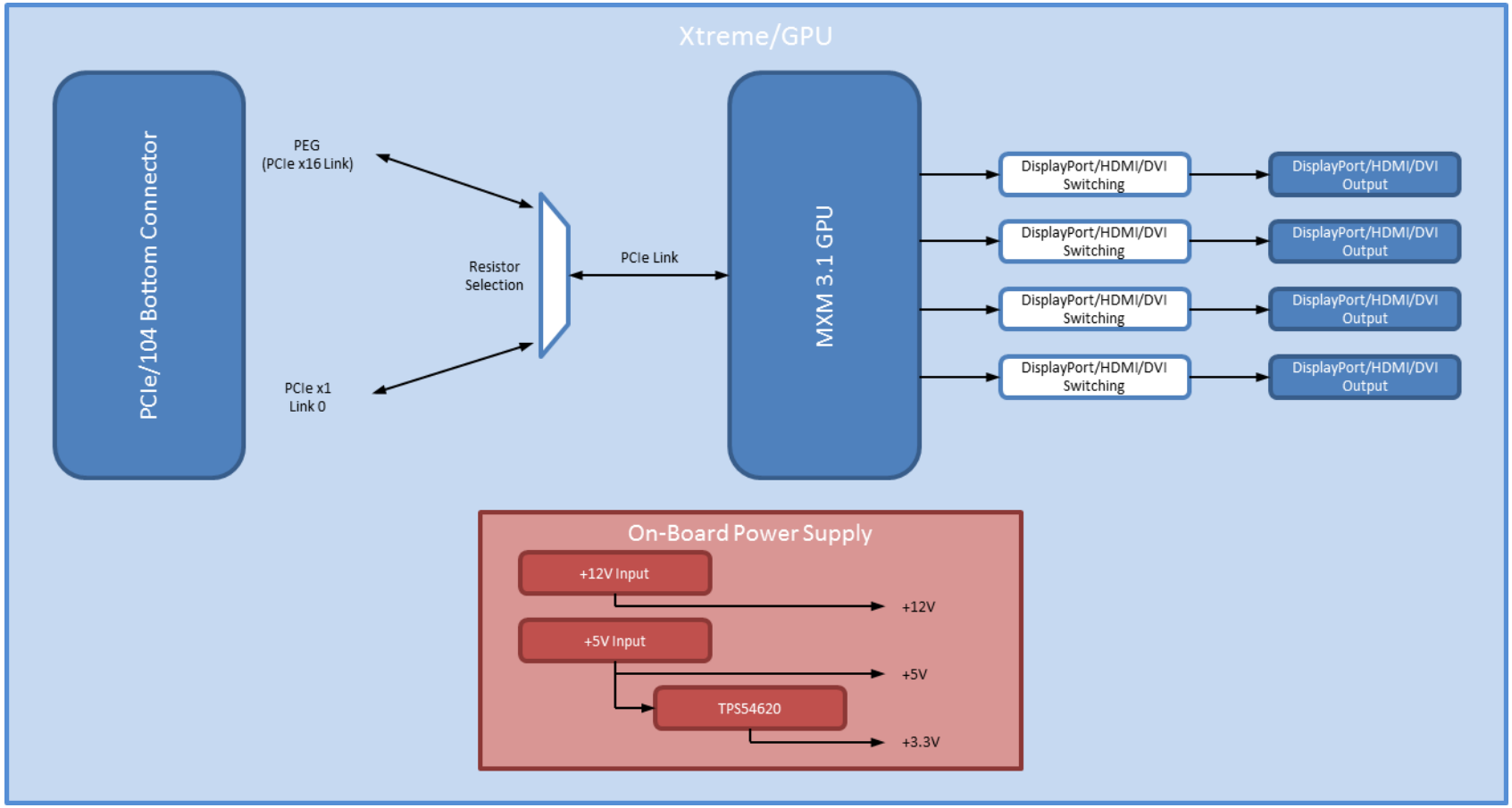

Connector Locations – Top Stacking (XGGBASE-01) Top Side

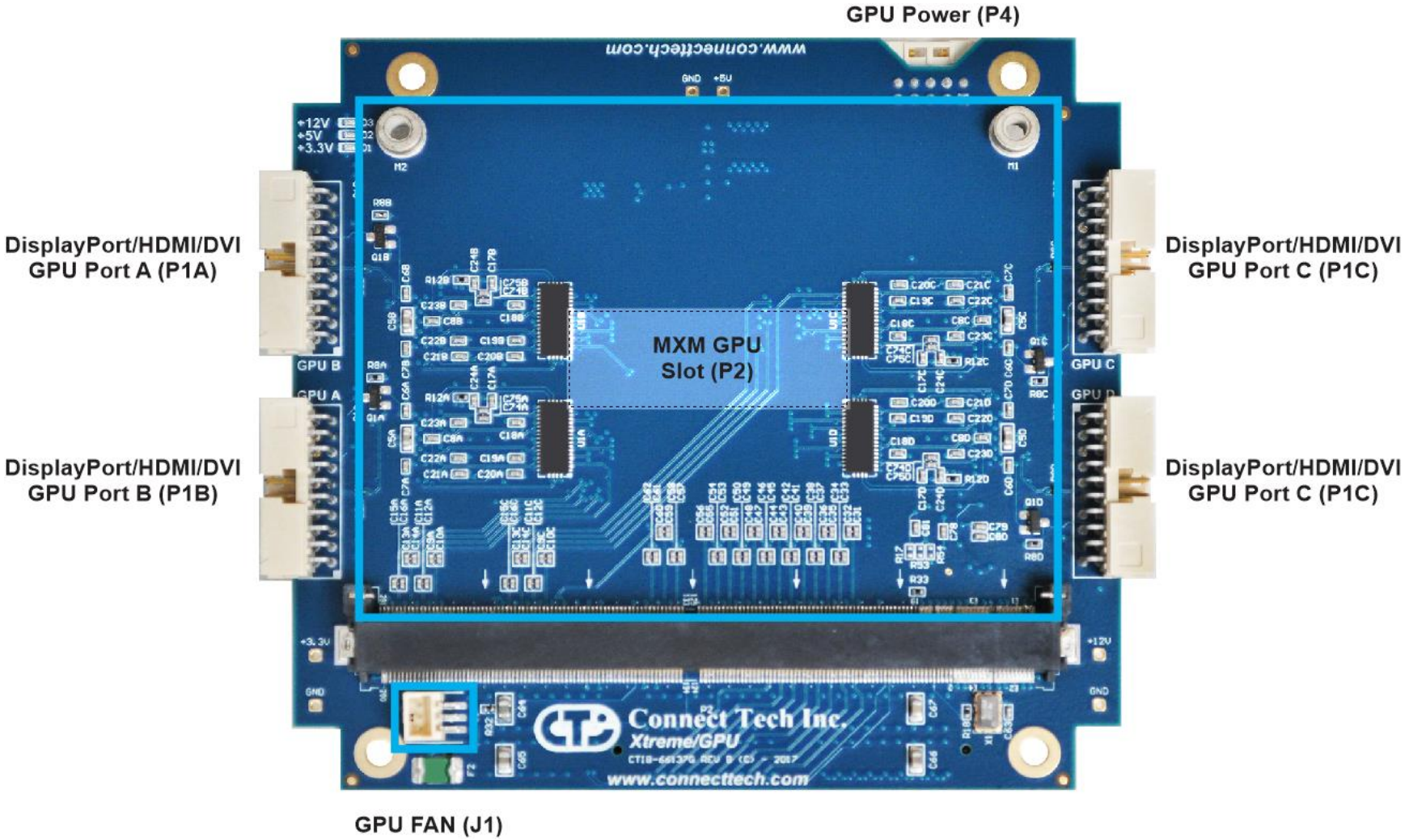

Connector Locations – Bottom Stacking (XGGBASE-02) Top Side

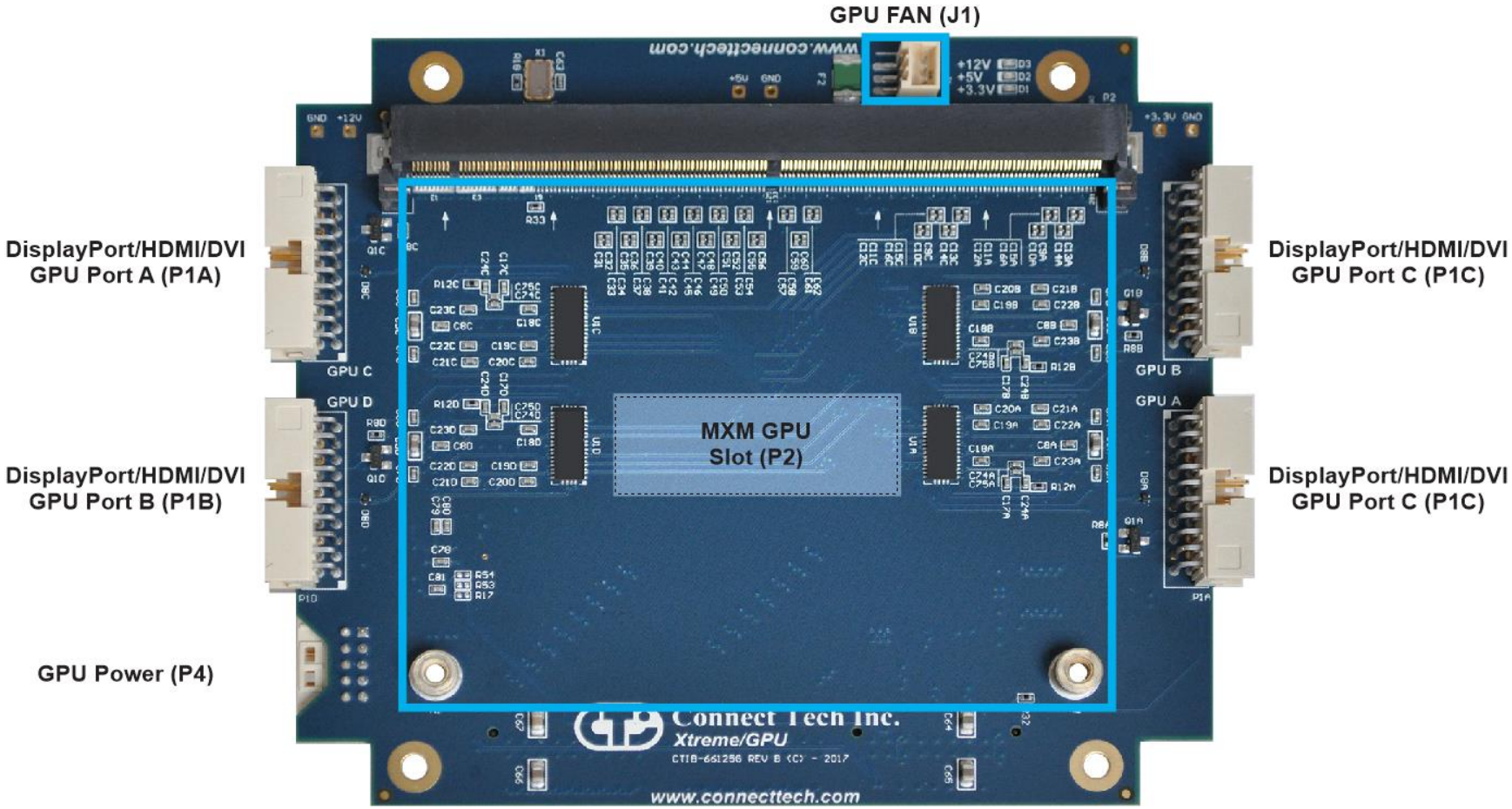

Connector Summary

Designator	Connector	Description
P1A	GPU Output A	DisplayPort/HDMI/DVI GPU Output A
P1B	GPU Output B	DisplayPort/HDMI/DVI GPU Output B
P1C	GPU Output C	DisplayPort/HDMI/DVI GPU Output C
P1D	GPU Output D	DisplayPort/HDMI/DVI GPU Output D
P2	MXM 3.0 GPU Card Connector	MXM 3.0 GPU Card Slot for MXM 3.0 GPU Cards
P3	PCIe/104 Bus Connector	Top Stacking (XGGBASE-01) PCIe/104 Bottom Connector to allow for Xtreme/GPU to be on Top of PCIe/104 Stack
		Bottom Stacking (XGGBASE-02) PCIe/104 Top Connector to allow for Xtreme/GPU to be on Bottom of PCIe/104 Stack
P4	GPU Power	Additional GPU Power Connector (Not Required for Operation)
J1	GPU Fan Connector	Fan Connector for Controlling GPU Fan

Detailed Feature Description

PCIE/104 Bottom Connector

Function	**PCIe/104 Stack Interface**	
Location	P3 (Top Stacking (XGGBASE-01))	
Type	Samtec Fine Pitch Stacking Connector	
Connector P/N	ASP-129646-03 Manufacturer: Samtec	
Pinout	Refer to PCI/104-Express & PCIe/104 Specification, Rev 2.01	

PCIE/104 Top Connector

Function	**PCIe/104 Stack Interface**	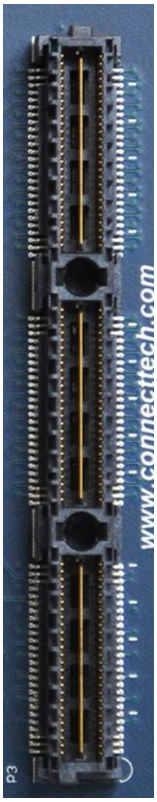
Location	P3 (Bottom Stacking (XGGBASE-02))	
Type	Samtec Fine Pitch Stacking Connector	
Connector P/N	ASP-129637-03 Manufacturer: Samtec	
Pinout	Refer to PCI/104-Express & PCIe/104 Specification, Rev 2.01	

MXM 3.0 GPU Connector

Function	**MXM 3.0 GPU Module Connector**	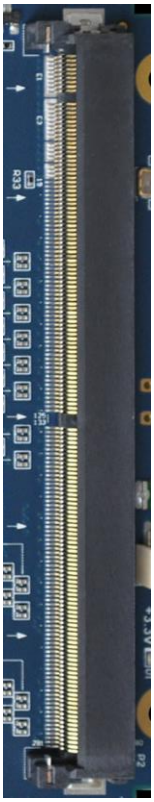
Location	P2	
Type	JAE Electronics Fine Pitch MXM 3.1 Connector	
Connector P/N	MM70-314-310B1-2-R300 Manufacturer: JAE Electronics	
Pinout	Refer to MXM Graphics Module Mobile PCI Express Module Electromechanical Specification Version 3.1, Rev 1.0	

DisplayPort/HDMI/DVI Connector

Function	**DisplayPort/HDMI/DVI Connector**
Location	P1A, P1B, P1C, P1D
Type	FCI Minitek Double Row 10 x 2
P/N	98464-G61-20ULF
Mating	10073599-020LF
Cable	CBG113, CBG145
Pinout	

Pin	Description	Pin	Description
1	DP0+/TMDS2+	2	DP3+/ TMDS CLK+
3	DP0-/TMDS2-	4	DP3-/ TMDS CLK-
5	GND	6	GND
7	DP1+/TMDS1+	8	DP_AUX-/ DDC DATA
9	DP1-/TMDS1-	10	DP_AUX+/ DDC CLK
11	GND	12	GND
13	DP2+/TMDS0+	14	Hot Plug Detect
15	DP3-/TMDS0-	16	GND
17	GND	18	GND
19	+3.3V	20	DP/TMDS SEL

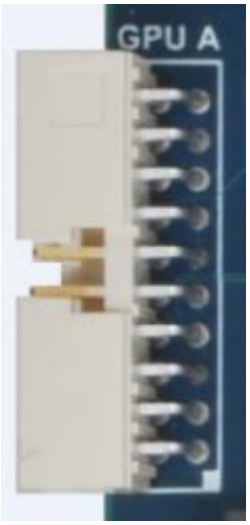

DisplayPort/HDMI/DVI Switching

The Xtreme/GPU has on board DisplayPort to HDMI/DVI/TMDS Switching circuity. This allows the Xtreme/GPU Video output to be configured to display DisplayPort or HDMI/DVI/TMDS signaling. The selection between DisplayPort and HDMI/DVI/TMDS is made with the mating cable which toggles Pin-20.

Below is a block diagram of the onboard video Display/HDMI/DVI/ Switching Circuitry:

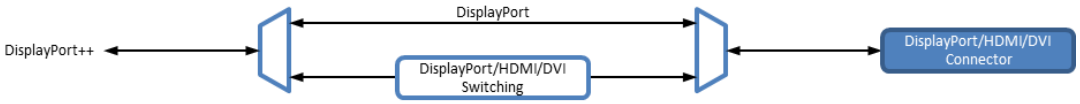

GPU Power

Function	**MXM 3.0 Power** [5]
Location	P4
Type	FCI Minitek Double Row 5 x 2
P/N	98464-G61-10LF
Mating	10073599-010LF
Pinout	

Pin	Description
1	+12V
2	GND
3	+12V
4	GND
5	+12V
6	GND
7	+12V
8	GND
9	+12V
10	GND

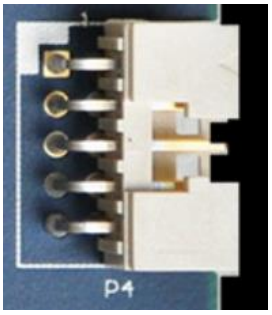

Note [5]: With regards to the GTX1050/150Ti enabled Xtrems/GPU, this connection may be required to reduce the voltage drop at load.

MXM 3.0 GPU Fan

Function	**MXM 3.0 GPU Fan Control**
Location	J1
Type	Molex Pico-SPOX Header
P/N	87437-0343
Mating	87439 Series Connector
Pinout	

Pin	Description
1	+12V
2	-
3	GND

Software and Drivers

The Xtreme GPU adapter will require system drivers for full functionality, the GPUs are compatible with Windows, and Linux Distributions as per NVIDIA's driver software.

Linux

The built in Nouveau Drivers can be used for display support with the Xtreme GPU adapter, however for full support you will be required to use NVIDIA's proprietary Driver. Details for the installation and supported Operating Systems can be found on NVIDIA's driver page.

https://www.nvidia.com/Download/index.aspx?lang=en-us

Note: When using the Xtreme GPU in Linux, please be advised that some Kernel releases may not have generic compatibility with certain NVIDIA GPUs, as such the system may not produce a display or become unstable. Prior to using your Xtreme/GPU adapter you may install the NVIDIA Proprietary Driver for full support or attempt to update the built-in Nouveau Driver.

Windows

The Xtreme GPU is compatible with Windows Operating systems, the Driver software is released and distributed by NVIDIA for full support details please visit NVDIA's Driver Website.

https://www.nvidia.com/Download/index.aspx?lang=en-us

GTX1000 Series

The Xtreme GPU with a GTX1000 series GPU under Windows 10, 8.1, and 7 will require additional setup, and a specific GPU driver. We have included a document link below that details this procedure and the driver download. If a new driver is required please contact Connect Tech Support.

http://connecttech.com/resource-center/nvidia-gtx1000-series-windows-driver-setup/

Note: There is currently no support for Windows Vista and XP, please contact Connect Tech Support for details.

Typical Installation

1. Ensure all external system power supplies are off.
2. Ensure that the MXM Module is correctly seated and held in place by the provided M3 screws; as well, check that the provided Thermal Solution (If one was requested) is firmly in place.
   a) Active Thermal Solution: Please make sure that the three pin connector for the Fan is plugged in
3. Install the Xtreme/GPU on to the PCIe/104 stack.
4. Install the necessary cables for the application.

   For the relevant cables, see the Cables & Interconnect section of this manual
5. Switch on the power for the PCIe/104 stack. DO NOT power up your system by plugging in live power. Please ensure that all three blue power LED's are lit before using the product.

On-Board Indicator LED's

The Xtreme/GPU has 3 on-board indicator LEDs.

LED	Description
D1	+3.3V
D2	+5.0V
D3	+12.0V

Current Consumption Details

Below are the maximum ratings of the Xtreme/GPU.

Maximums	Amps	Watts
Theoretical absolute maximum total draw of all functionality on the board	10.00 A	120 W

Below are measurements taken with the Xtreme/GPU running in various configurations the results are total system draw, see notes for system details. These values also include the power consumption of the test system that the Xtreme/GPU was installed in. Some values will change depending on what mode the Xtreme/GPU is running in and what MXM Module is installed.

Actual Measurements	Amps	Watts
Commercial NVIDIA GeForce GT745M Single DisplayPort[3]	1.67 A	19.99 W
Commercial NVIDIA GeForce GT745M Single DisplayPort under Stress[3,4]	4.84 A	58.09 W
Commercial NVIDIA GeForce GT950M DDR3 Single DisplayPort	TBD	TBD
Commercial NVIDIA GeForce GT950M DDR3 Single DisplayPort under Stress	TBD	TBD
Commercial NVIDIA GeForce GTX950M GDDR5 Single DisplayPort	TBD	TBD
Commercial NVIDIA GeForce GTX950M GDDR5 Single DisplayPort under Stress	TBD	TBD
Commercial NVIDIA GeForce GTX970M Single DisplayPort	TBD	TBD
Commercial NVIDIA GeForce GTX970M Single DisplayPort under Stress	TBD	TBD
Commercial NVIDIA GeForce GTX1030 Single DisplayPort	2.34 A	28.08 W
Commercial NVIDIA GeForce GTX1030 Single DisplayPort under Stress	5.68 A	68.16 W
Commercial NVIDIA GeForce GTX1050 Single DisplayPort	2.84 A	34.08 W
Commercial NVIDIA GeForce GTX1050 Single DisplayPort under Stress	7.98 A	95.76W
Commercial NVIDIA GeForce GTX1050Ti Single DisplayPort	2.96 A	35.52 W
Commercial NVIDIA GeForce GTX1050Ti Single DisplayPort under Stress	8.24 A	98.88 W

Note [3]: System Specs/Testing Configuration: Intel i7-3615, 4GB RAM, Windows 7 Enterprise N (32-Bit), XGG PCIe x16 Connection
Note [4]: Stress test was performed using 3DMark 1.10 Software.
Note [5]: System Specs/Testing Configuration: Intel i5-4400E, 8GB RAM, XUbuntu Linux 16.04 (64-Bit), XGG PCIe x16 Connection
Note [6]: Stress test was performed using Cuda 9, GPU_Burn application.

Thermal Design

Thermal design is critical for reliable operation of the Xtreme/GPU over the extended temperature range of -40ºC to +70ºC. Without a proper thermal solution in place, the GPU will shut down to prevent thermal damage. Most GPUs thermal throttle their performance when they are approaching their maximum junction temperature. However, if the throttle mechanism is not enough to keep the GPU within an acceptable safe operating temperature range, then the GPU will shut down.

With the Connect Tech supplied XHG Thermal Solutions, it is still possible to push the GPU into the throttling and shutdown temperature range. As such it is up to the system designer to ensure that the GPU remains within the safe operating temperature range. The center of the top of the MXM Thermal Plate should be kept below +70ºC to ensure that the GPU does not shutdown. With respect of the GTX1050/1050Ti, as they produce a larger thermal output the interface plate must be kept below +55ºC to ensure that the GPU does not shutdown.

Below we have calculated the thermal resistance values of the Connect Tech GPU interface plates that are offered with the Xtreme/GPU, this is offered as a guideline for customer designed thermal solutions.

GPU Part	Connect Tech Interface Plate	Max Temperature [1]	Thermal Resistance
Commercial NVIDIA GeForce GT745M	CTIA-00484	N/A	TBD
Commercial NVIDIA GeForce GTX950M DDR3	CTIA-00598	N/A	TBD
Commercial NVIDIA GeForce GTX950M GDDR5	CTIA-00598	N/A	TBD
Commercial NVIDIA GeForce GTX970M	CTIA-00592	N/A	TBD
Commercial NVIDIA GeForce GTX1030	N/A	97ºC	TBD
Commercial NVIDIA GeForce GTX1050	CTIA-00763	97ºC	0.40 C/W
Commercial NVIDIA GeForce GTX1050Ti	CTIA-00763	97ºC	0.40 C/W

Note [1]: Maximum Temperature as reported from the GPU core/die, if exceeded the GPU may malfunction and limit the life of the product

Thermal Solutions

The Active thermal design for the NVIDIA GTX1050/1050Ti based Xtreme/GPU with the XHG009 Active Thermal Heatsink w/ Fan solution is intended for development purposes for Lab use, as such is at the discretion of the system designer to ensure that the GPU remains within the safe operating temperature range when used in a production system.

Active Thermal Heatsink w/ Fan (XHG009)

Function	**Active Cooling of Xtreme/GPU**	
Type	Active	
Fan Power	+12V	TBA - Dimensions

Active Thermal Solution (XHG001)

Function	**Active Cooling of Xtreme/GPU**	
Type	Active	
Fan Power	+12V	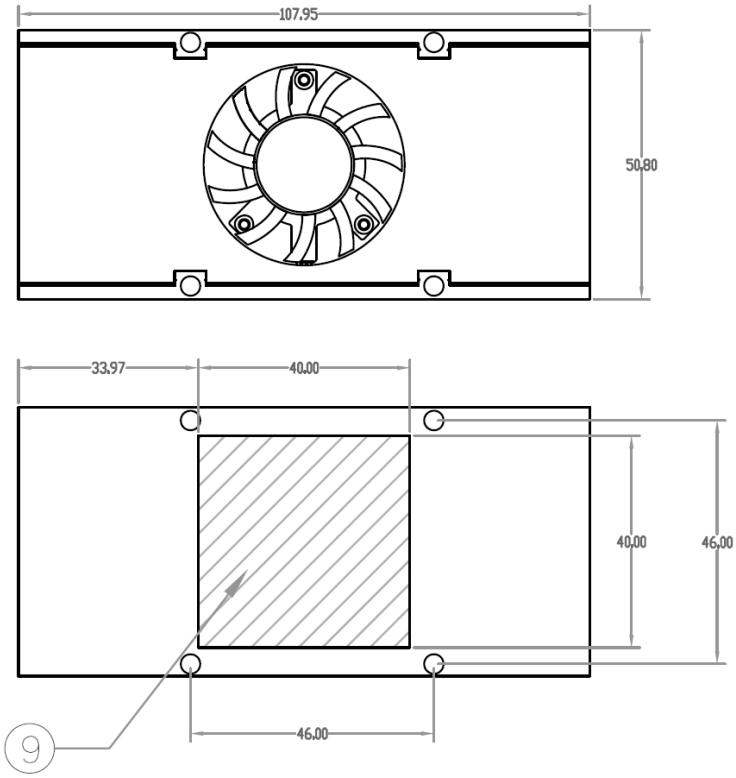

Note [3]: Not intended for use with Xtreme/GPU boards that included the Nvidia GTX1050/1050Ti

Passive Thermal Solution (XHG002)

Passive Heat Sink

Function	**Passive Cooling of Xtreme/GPU**	
Type	Passive	
Heat Pipe Spec	8mm Copper Heat Pipe Min Bend Radius: 24mm Min Bend Angle: 90 Degrees	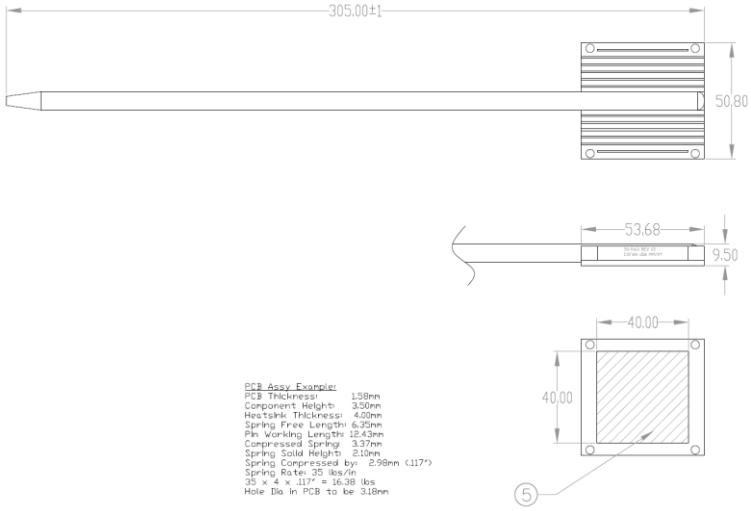

Mechanical Details

A complete **3D STEP Model** file of Xtreme/GPU can be downloaded here:
http://www.connecttech.com/ftp/3d_models/XGG014_3D_MODEL.zip

2D Mechanical Dimensioned Drawing (Top View) - PCB and Mounting Hole Dimension are in mil.

Top Stacking (XGGBASE-01) Top View

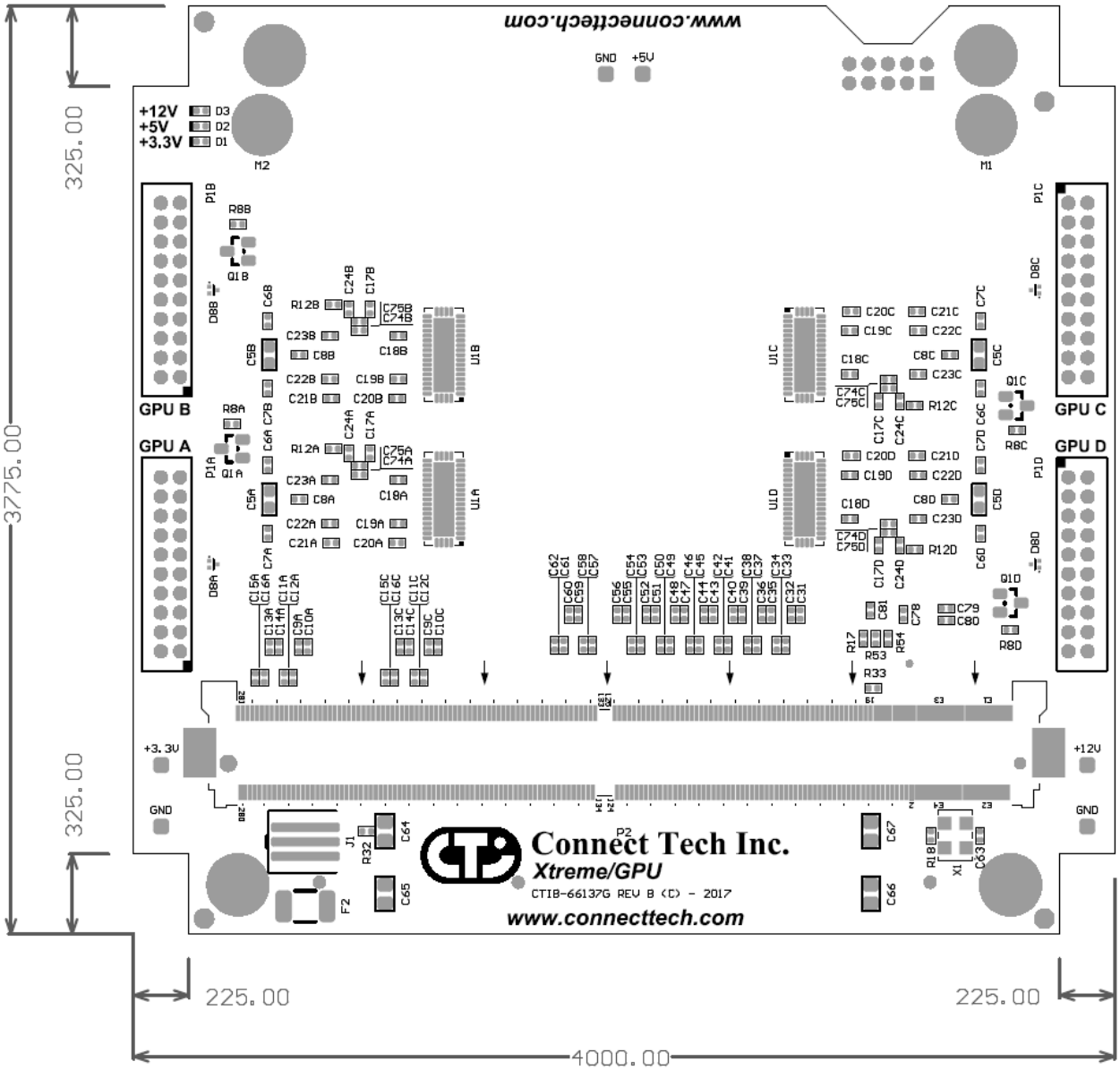

Bottom Stacking (XGGBASE-02) Bottom View

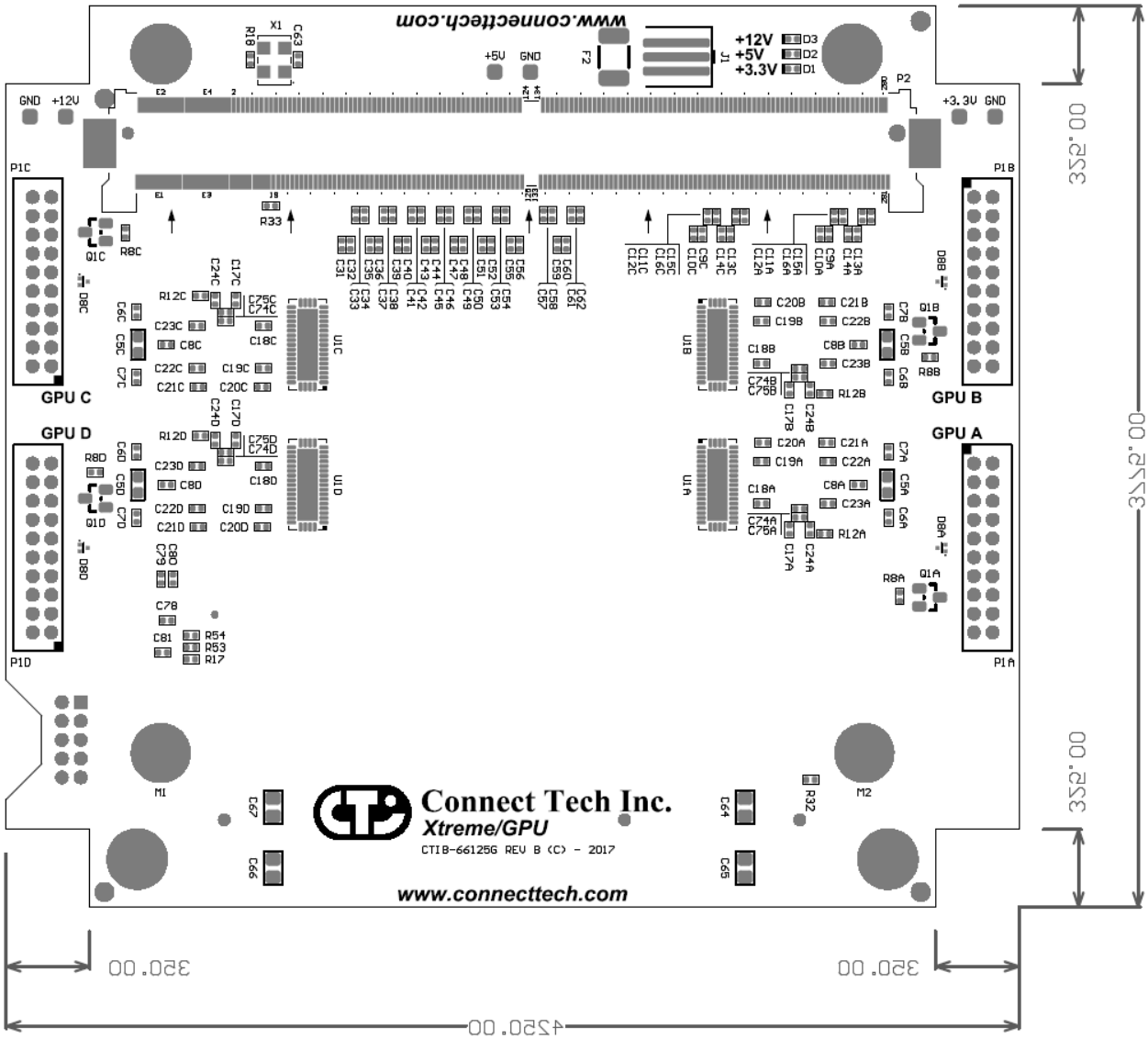

Cables

The following table summarizes the Xtreme/GPU cables available.

Cable Kits

Drawing No.	Part No.	Description
CTIC-00432	CBG113	DisplayPort Female Panel Mount to 20-Pin MiniTek
CTIC-00461	CBG145	HDMI Female Panel Mount to 20-Pin MiniTek

Cable drawings are available upon request. Send an email request to: **support@connecttech.com**